Durable Corporation
(800) 537-1603

Model: B612-14

MODEL: *B612-14*

Size

Projection	6"
Height	12"

Length:

-Overall	16"
-Anchor Holes	14"
-Rubber	10"
Angle Size (2)	1/4"x3"x4"x11-1/2"

Bolt Heads Are Inscribed
"DURABLE CORP"

Date: 04/06/09

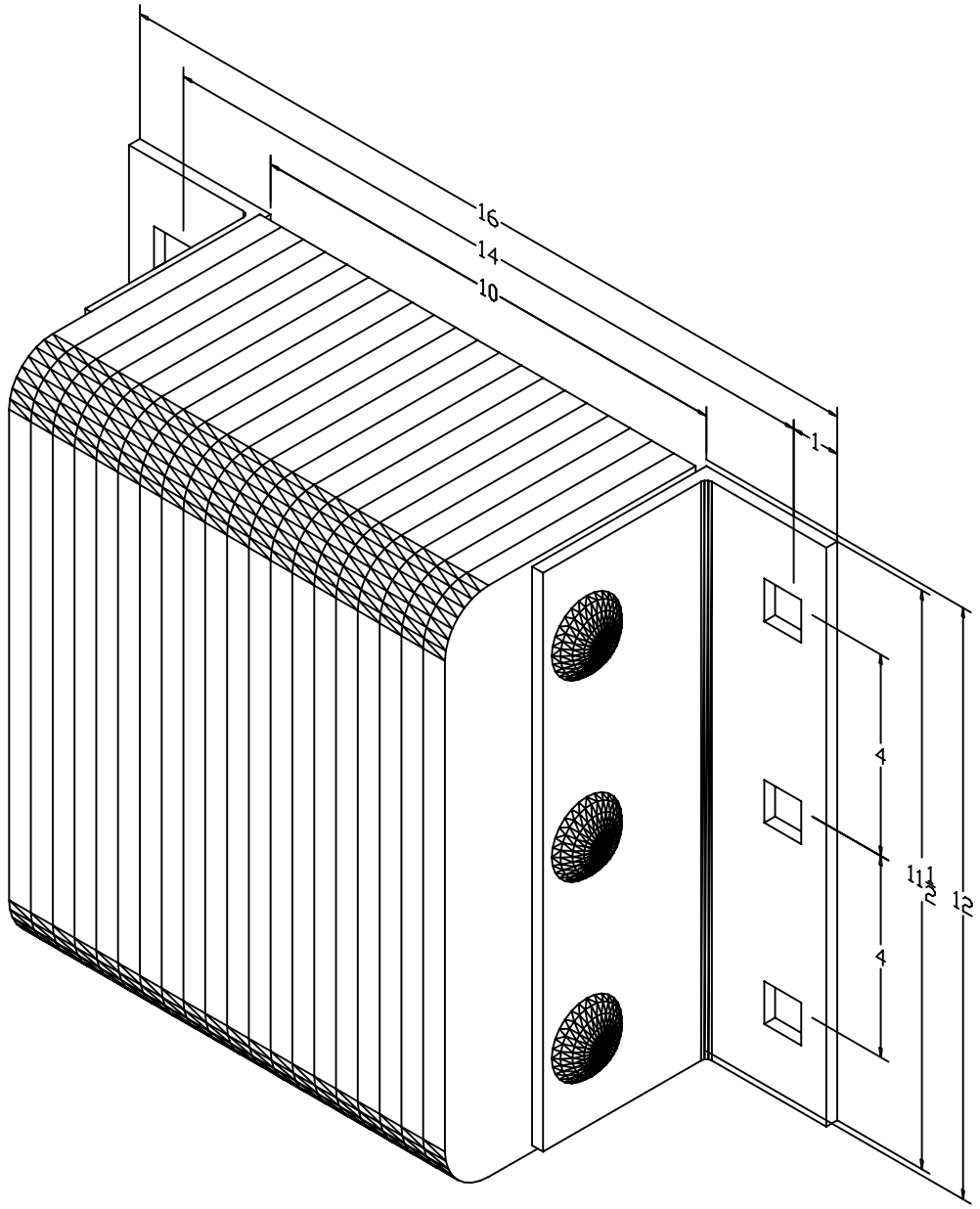

All measurements are +/- 1/8"

Confidential -- Property of Durable Corporation