Durable Corporation
(800) 537-1603

Model: B4512-18-SFP1

MODEL: *B4512-18-SFP1*

Size

Projection	5-1/8"
Height	12"

Length:

-Overall	17-1/4"
-Rubber	14"
Angle Size	1/4"x3"x3"x11-1/2"
Plate Size	1/4"x3"x11-1/2"
Slot Angle Size	1/4"x3"x4"x11-1/2"
Face Plate Size	3/8"x12"x13-1/2"

Bolt Heads Are Inscribed
"DURABLE CORP"

Date: 11/02/15

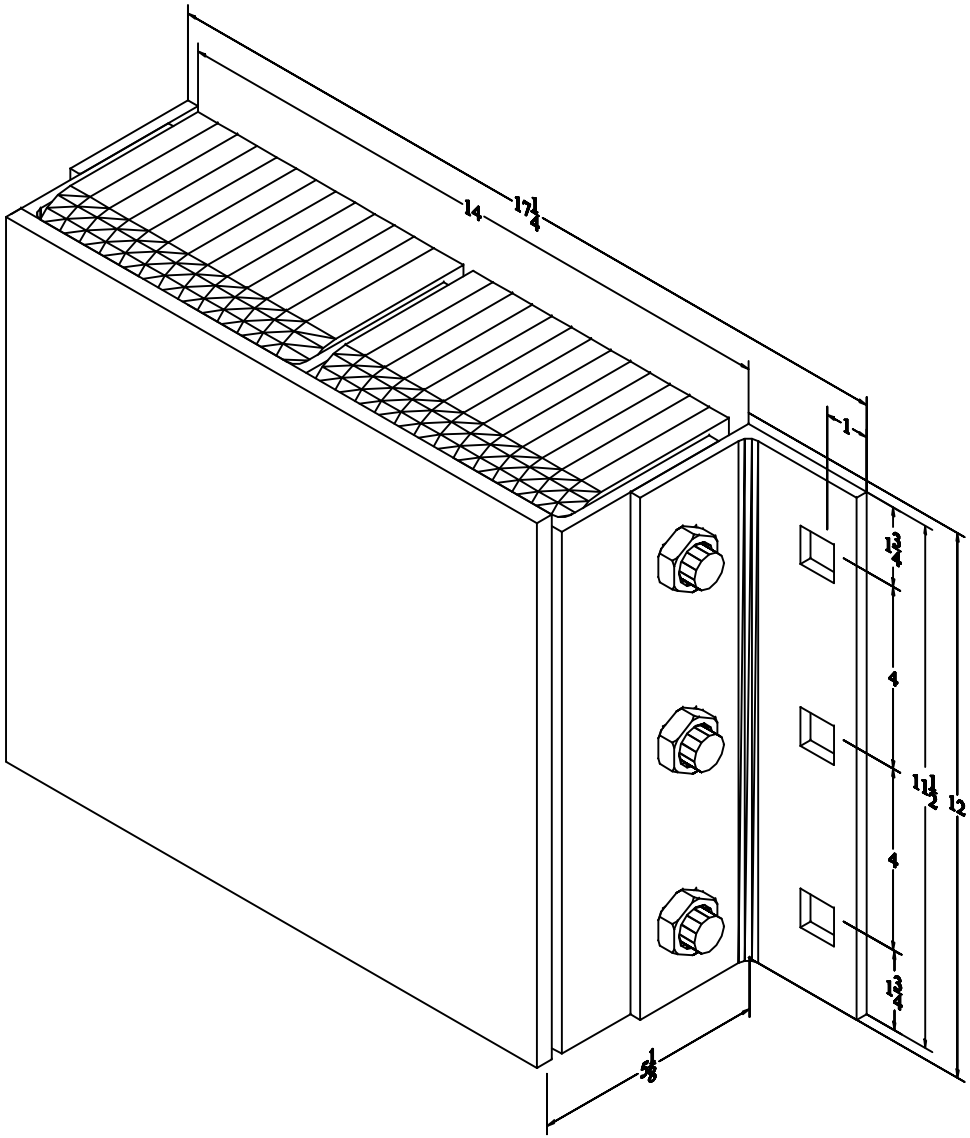

All measurements are +/- 1/8"

Confidential -- Property of Durable Corporation