Durable Corporation
(800) 537-1603

E-D6

Model : E-D6

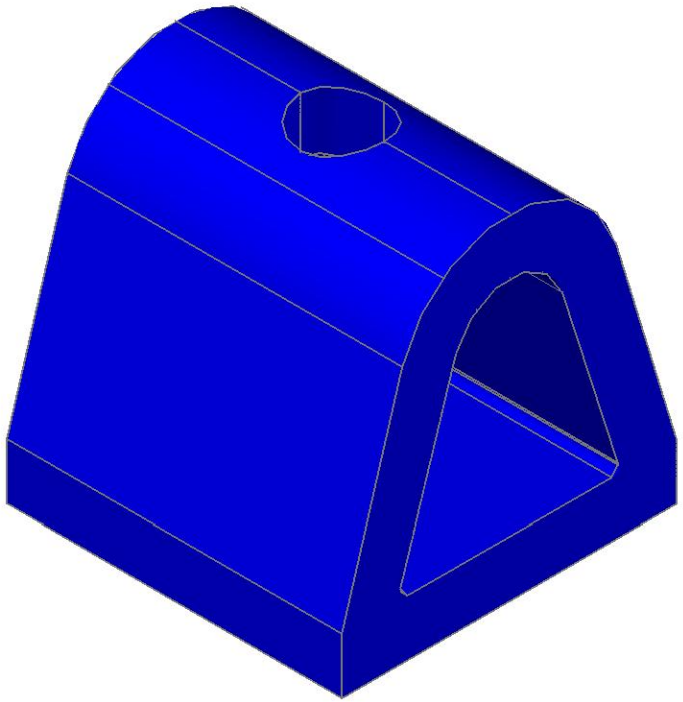

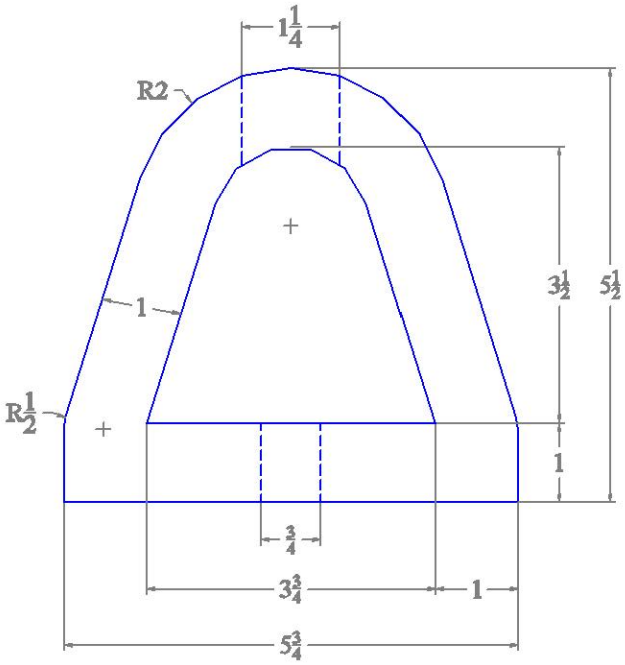

Date: 10/10/13

All measurements are +/- 1/4"

Confidential -- Property of Durable Corporation